PIKES PEAK RADIO AMATEUR ASSOC.

# Ø BEAT

COLO. SPRINGS, COLORADO

Dec. '68

## INCREASE IN DUES TO BE VOTED ON AT DECEMBER MEETING

A proposal to change the amount of annual dues for the PPRAA was made in a petition for a By-Laws amendment signed by the required number of members of the Board of Directors. The proposal will be voted on at the regular December meeting.

* * * * * * * * * * * * * * * * * * * * * * * *
* No information on the program *
* for the December 11 meeting had been *
* received as Zero Beat went to press. *
* The only information we can give *
* is the date, the fact that the meeting *
* starts at 8 p.m., and that it will be *
* as usual at the Naval Reserve Train- *
* Center, Lake and Logan Streets. *
* * * * * * * * * * * * * * * * * * * * * * * *

The proposed change is as follows: "It is proposed that Article IX of the PPRAA By-Laws be changed to read as follows:

"MEMBERSHIP DUES.

"The dues of the members of the association shall be as follows:

"a. Full Member $3.00

"b. Novice Member $2.00

(Continued on Page 4)

## COMMITTEES FOR COMING YEAR ANNOUNCED BY BOARD CHAIRMAN

PPRAA committees for the coming year were announced in November by George Kowalski, WØGCH, chairman of the Board of Directors.

Following is a list of committees and those PPRAA members named to serve on them:

Program Committee-----George Kowalski, chairman, and members of the Board of Directors.

Interference Committee---Harlan Talley, WAØJCS, chairman; Jim Kieffaber, KØSPS; Harold Combs, WAØPNR; Wally Rowland, KØWMD.

Auditing Committee---Bill Haskin, KØCEN; Art Mayer, WAØAEH.

Technical Instruction Committee--John Summers, WAØHHN, and Wally Rowland, KØWMD, co-chairmen; Eldon Lewis, WAØERA, Rosemarie Lewis, WAØMNL; Linda Lewis, WAØMNM.

Membership Committee--Ed Pompea, KØZPG, chairman; Dean Jaynes, WAØPJH; Dick Hahn, KØJUA; Irvin Ebel, WØKWV; Jim James, WAØTAV; Pete

(Continued on Page 4)

ZERO BEAT

Published monthly in the interest of the members of the Pikes Peak Radio Amateur Association, Inc., Colorado Springs, Colorado

Clarence (Frank) Craw, WØHWH, Editor
Telephone 635-3373

Address all items and exchanges to:
1142 Rainier Drive, Colorado Springs, 80910

-o-

BOARD OF DIRECTORS
Pres. - Pete Demario, KØUDG
Vice Pres. - George Kowalski, WØGCH
Secty. - Rosemarie Lewis, WAØMNL
Treas. - Rudy Wroblewski, WAØPJG

- 0 -

Max Main, WØBDH
Harold Combs, WAØPNR
Ed Pompea, KØZPG
Eldon Lewis, WAØERA

-o-

The PPRAA meets the second Wednesday of each month in the U. S. Naval Reserve Training Center, Lake and Logan Streets, starting at 8 p.m. All radio amateurs and other interested persons are invited to attend.

COPY DEADLINE for JANUARY ZERO BEAT will be December 23.

++++++++++++++++++++++++++++++++++++++++++++++++++++++++++++++++++++++++++++++++++++++

Editorial

THIS WE REALLY NEED

Another proposal to amend the By-Laws of the PPRAA will be voted on at the December meeting---this one to change the amount of annual dues.

In considering this proposal, members must realize that like the cost of living and other things, the cost of running an organization such as the PPRAA has increased.

The proposed increase in annual dues is still much below that charged by many such organizations and still below that charged by others. The proposed increase would still make dues amount to only 25 cents a month---a small sum, if you consider today's quarter.

We heartily urge that the members consider this favorably at the December meeting.

-o-

A LOT OF HARD WORK

Since 1970 will be the 20th anniversary of the founding of what is now the PPRAA---the first meeting of what was then known as the El Paso Radio Club was held November 8, 1950,--there have been some suggestions that we might c lebrate the occasion by taking on another Rocky Mountain Div., ARRL, convention such as the one we sponsored in 1966.

A very good thought---provided all the members are as willing to work as they were in setting up the 1966 affair.

Wally Rowland, KØWMD, who was the "lead dog" in that affair, and many others can testify to the huge amount of time and effort that went into making that convention such a success. Another convention would be just as much work, or even more so, for we'd want to try to make our next one even better than the 1966 one.

If we consider such a move, we'd better start work now. If we consider such a move, every member of the PPRAA had better plan on a lot of work in the period between now and June 1970.

After the success of our 1966 convention, we wouldn't want a future one to "flop."

-o-

Since this will be my last oopor-tunity this year, may I wish all the readers (I hope) of Zero Beat a Very Merry Christmas and the happiest of New Years. May all your contacts by 5-9-9-plus, with lots of DX among them!

---Frank, WØHWH

## The PRESIDENT'S COLUMN

Another month and another auction have passed us by. I want to thank all of you for your support at the auction. I hope that you enjoyed it and that you found yourselves some nice goodies to take home. I would remind you of our auction in February and ask that you start thinking about what you might bring to it.

I hope that all of you had a good Thanksgiving and I wish each of you a very Merry Christmas. With my prayer for peace in the world comes my sincere wish that the New Year will bring good health for your families and yourselves, and that you have many solid contacts in the New Year.

73's Pete KØUDG

-o-o-o-

DON't FORGET that as of November 22--

Only operators with an Extra Class license may operate in the segments: 3500-3525, 7000-7025, 14000-14025, 21000-21025, 3800-3825 (fone), 21250-21275 (fone.)

Only operators with Advanced (or Extra) Class license may operate in the segments: 3825-3850, 7200-7225, 14200-14235, 21275-21300, 50.0-50.1 MHz.

## CARL SMITH, THOMAS BANKS ELECTED TO HEAD ROCKY MT. DIV, ARRL

Carl Smith, WØBWJ, was reelected director of the Rocky Mt. Div., ARRL, for another two year term and Thomas G Banks, W5HJ, was elected vice director, according to ARRL Bulletin 196.

Carl beat his opponent, Bois R. Council, KØATZ, by a comfortable margin of votes, 702 to 483. The vice director's race was much closer, with Tom beating out John H. Sampson, W7OCX, the present vice director, 603 to 576.

-o-o-o-

## AMATEUR SUED FOR TEN YEARS OF TVI FOR NEIGHBOR

The following story appeared on the Associated Press wire November 22:

TAMPA, Fla. AP - Lee H. Eggers of Sarasota is suing his next door neighbor for $1 million on grounds his neighbor's amateur radio station his disturbed his television reception for 10 years.

Eggers suit against Ansel Gridley was moved to the U.S. District Court in Tampa Thursday. In a motion for dismissal, Gridley said Eggers did not complain to him once during the 10 years.

A hearing is scheduled next month.

**D&M Electronic Supply**

715 N. Weber St. Colorado Springs, Colo. 80902
Phone 633-4668

Wholesale Radio, TV, Parts Tubes, Batteries

Industrial Electronics, Test Equipment

Authorized RCA Distributor

COMMITTEES

(Continued from Page 1)

Labowski, KØCVZ, Leroy Smith.

Publicity Committee--Frank Craw, WØHWH, chairman; Ken Dixon, WØKIX; Don Emory, WØDYU; John Kester, WAØ-LVL; Mrs. Esther Parker.

Advertising Committee--Art Mayer, WAØAEH, and Pete Demario, KØUDG.

Activities Committee-----George Kowalski, WØGCH, chairman.

Field Day Committee-----Pete Demario, KØUDG; John Summers, WAØ-HHN; Bob Marek, WAØKZG.

Marathon Committee-----Eldon Lewis, WAØERA; Howard Dump, WAØ-BQD; Jerry Bishop, WØICQ.

Picnic Committee-----Rosemarie Lewis, WAØMNL; Ed Pompea, KØZPG; Doc Cornell, K1JSJ/Ø; Ida Demario, WA-ØNTA; Dottie Vacca, WNØTIS.

Auction Committee--Pete Demario, KØUDG; Bill Haskin, KØCEN; Ida Demario, WAØNTA.

Operation Canta Claus-John Marek, WAØEJI.

Repeater Committee-----George Kowalski, WØGCH; Bill King, WØLKD.

-o-o-o-

* * * * * * * * * * * * * * * * * * * * * * * *
* The following article was received *
* from Larry Lewis, WA6BGG/WAØDGL *
* by way of Rosie Lewis, WAØMNL. *
* Since there was nothing on the *
* clipping to indicate what publication it *
* was from or when the article was pub- *
* lished, we are unable to give the pro- *
* per credit for the article. --Editor *
* * * * * * * * * * * * * * * * * * * * * * * *

STUDENTS' MOONRAY
TO GO WITH APOLLO

BETHLEHEM, Pa. ---When Apollo lands on the moon it will have MOONRAY with it. MOONRAY, a privately financed effort to place a transponder and telemetry unit on the moon, is one of several projects planned by electrical engineering students at Lehigh University here. These students belong to a group named Student Systems Development Organization (SSDO).

The isotope-powered unit would serve as a backup communications package for the astronauts, as a site relocation beacon that would continue to operate at the landing point for a year or more, and as a transponder using frequencies licemsed to the amateur radio service.

MOONRAY is sponsored by the Nassau Amateur Satellite Tracking Socie. (NASTAR) on Long Island. The Lehigh group, sanctioned by NASA, has requested permission from NASTAR to participate in package development and to test the package in a lunar surface similator built by students of the Lehigh engineering lab.

Officially registered with NASA as a Ground Reception Station, the Lehigh group plans to take part in two projects besides MOONRAY. One is OSCAR (Orbiting Satellite Carrying Amateur Radio), a project sponsored by Oscar, Inc., an organization based at Foothills College, Calif. This group has already launched four satellites as a support communications for other tracking installations. When a fifth OSCAR is launched this spring, SSD-O will track it to check the accuracy of its own equipment by comparing its own findings against published orbital data.

The Lehigh group also will build a high-powered transmitter for 144 and 4: MHz with which the students will transmit over OSCAR and communicate over a wider range than is now possible on these

(Continued of Page 5)

DUES INCREASE

(Continued from Page 1)

"c. Associate Member $1.00

"d. Family Member, described in Article II, Section I d. $2.00

"The balance of Article IX to remain as at present."

The proposed amendment must receive the affirmative vote of the majority of the voting members at the December meeting to become official.

# ROSIE'S REPORTINGS

By Rosemarie Lewis, WAØMNL

(Since Rosie is on an "emergency" visit in Iowa with her family, the following was gleaned from notes enclosed in a letter received just before Zero Beat went to press - Editor)

-rr-

John Summers, WAØHHN, was awarded a CW Armed Forces Day certificate.

-rr-

Harold Jackson, K9KAH, has received a new call---WØMEJ.

-rr-

The ARRC was being called to aid in the search for a lost boy when the boy was found.

-rr-

Butch Schisler, WØGBX, and John Felix, KØSLN, spent some time in the hsopital recently.

-rr-

The AREC worked Goblin Patrol with headquarters at the Red Cross Radio Center, using equipment donated by Jim Russell. Bands used locally were 2 meters and 40 meters. AREC worked in conjunction with the police and I'm sure some mischief was diverted due to the FB efforts.

MOONRAY

(Continued from Page 4)

frequencies. SSDO will be able to collect information on propagation characteristics. Possibly SSDO will some time in the future be assigned as an OSCAR Ground Command Station.

SSDO also will receive and decode weather pictures transmitted by ESSA (Environmental Science Service Administration) satellite.

-o-o-o-

DIGEST OF ARRL BULLETINS

The sub band restrictions announced in FCC Docket 15928 went into effect on November 22. A tear out chart of the portions of the band available to each class of license after that date is on page 64A of November QST. Copies of the chart are available from ARRL headquarters, Newington, Conn., 06111 upon receipt of a stamped self addressed envelope, with the words Amateur Frequency Chart in the upper left hand corner.

-arrl-

The United States has concluded a reciprocal agreement with Monaco, effective December 1. Amateurs of one country visiting or residing in the other may obtain permission to operate their own stations there. Monaco, along with the Barbados and Surinam adds to the Oct. QST list.

CW

Distributors of Electronic Equipment

John WAØADV Mike WAØKXR Jeff WØLDU
Willard NØBQO Gary WAØKLP Pete WØOGI
John WØFU

The Rocky Mountain Area's Leading Supplier of Amateur Radio Equipment

- - STORE HOURS - -
Monday-Friday: 8:30 am-6 pm----Saturday: 8:30 am-5:30 pm
Free Parking at Our Radio Parking Lot - 1540 50 Larimer Street

CW ELECTRONIC SALES COMPANY
1237 16th St. Denver, Colo. 80202
Phone 244-5523
The Old Radio Corner At 16th & Larimer For Over A Quarter Of A Century

The two items and circuit diagrams which appear on this page have been reprinted as of possible interest to Zero Beat readers.

The capacity checker appeared in the Colorado/Wyoming Army MARS newsletter, which in turn, reprinted it from the Minnesota MARS Newsletter.

The circuit and information on the preselector appeared in the Central California Radio Council "Circle" designed by W6KZF. -- Editor

## AN EASILY CONSTRUCTED CAPACITY CHECKER

Locating faulty resistors, coils and fuses is not too difficult because we can check for continuity on an ohmmeter. Most of us do not have a bridge for checking capacitors.

In this checker, the neon light will glow as the current passes through it. When testing a capacitor, the light will blink once or twice, while the plates are loading, and then will remain off. If the capacitor is not good, the light will continue to blink. When checking capacitors wired into circuits, one end must be disconnected.

This checker cannot be used on electrolytics.

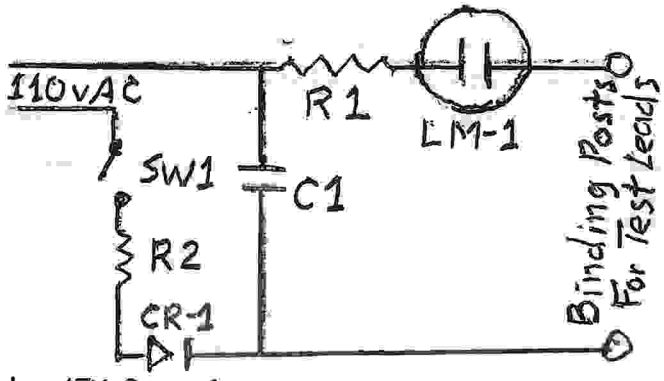


R-1 - 47K 2w resistor
R-2 - 330K 2w resistor
LM-1 - Neon Lamp NE 51
C-1 - 8 or 10 Mfd capacitor 450v DC
CR-1 - 1N2611 diode (not critical)
SW-1 - SP toggle switch

## MAKING A MOUNTAIN OUT OF A MOLEHILL

"The gain to be realized by inserting this preselector in the antenna lead will take a signal not registering on the S meter and make it 20 DB over 9, believe it or not. On my Panadaptor it makes a small pip a big mountain, hence the headline, Making a Mountain Out of A Molehill. I built mine in a 4x5x3 Minibox, including a power supply but it could be built inside a receiver.

"Means to short it out when not wanted should be made. C-1 and C-2 should be controlled from the front panel.

"A similar circuit using transistors appeared in August 1968 QST, page 43."

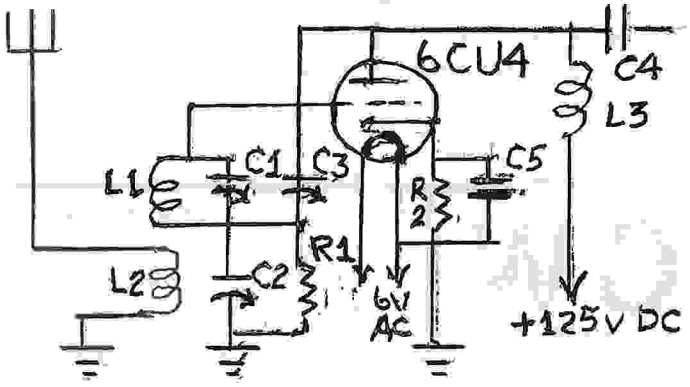


L-1 - 12 turns 3/4" form
L-2 - 3 turns 3/4" form
L-3 - 1 mh RFC
C-1 - 7-102 mmf
C-2 - 7-102 mmf
C-3 - 5-25 mmf NPO
C-4 - 180 mmf 600v
C-5 - .01 600v disc
R-1 680K
R-2 82 ohms

## TECHNICAL IDBITS

By George Kowalski, WØGCH

The big news in integrated circuits today is the price war which has been going on for a couple of months. Sophisticated linear ICs are now down to a price where you can't afford not to use them. For example, the MC1550 RF-IF Amplifier came down from $4 to 75 cents. See September '67 QST for application. The popular MA709, used for mike amps, active filters, etc., is down from $6 to $1.95. Watch this column and come to the meetings to find out more about these little gems.

-o-o-o-

TECHNICAL (?) DAFFYNITIONS

Collector--saver.

Common Collector--one who collects from everybody.

Collector Capacity--the maximum amount of people a common collector can handle.

Collector Breakdown--end result of being a common collector.

Emitter--exit.

Common Emitter--the only door in the joint.

Emiter Capacity--the total amount of people that can squeeze through the door at the same time.

Emitter Breakdown--broken down door.

Voltage Drop--a candy, like gum drop.

Current Density--present stupidity.

Current Gain--most recent rise in the stock market.

Power Gain--fullback up the middle.

Atom--part of the American colloquial expression "up and atom."

Delay Time--the time it takes to start working after you have arrived on the premises.

Rise Time--the time it takes to get up in the morning after the alarm has gone off.

Storage time--accrued sick leave.

Fall Time--September to November.

Switching Transistors--the act of changing one transistor for another.

DCTL--Don't complian if the transistor is lousy.

Mobility--rapid transit.

Thermal resistance--a slap in the face.

Dynamic Switching----changing clothes on the dead run.

Miniature--small.

Micro--damn small.

(Courtesy Larry Lewis, WA6BGG/WAØDGL---the editor is not responsible.)

-o-o-o-

## LEWIS FAMILY ON 'EMERGENCY' TRIP TO IOWA DUE TO ILLNESS

The Lewis family, Eldon, WAØERA, Rosie, WAØMNL, and Linda, WAØMNM, left Colorado Springs suddenly the week before Thanksgiving for Greenfield, Iowa, due to the illness of Eldon's mother.

A letter received from Rosie just before Zero Beat went to press states:

"We've had good communications mobile from here and appreciate the help Colorado Springs stations have done.

"Eldon's brother, Dale, was on a ship near Africa and we've had communications with him via WØAJA, Harold. A sked was kept every day and mother Lewis's condition reported to Dale aboard ship.

"As I write this, today's report was that Dale's ship has docked coast of Africa and a chartered plane was waiting to bring him home. Dale was able to keep in touch with his family in California via fone patch. Dale does not have a "ticket," and the radio man on the Glanor Challenger certainly has the heartfelt thanks of all concerned.

"WØAJA is a cousin of Eldon's.

"We will be backin Colorado Springs after Thanksgiving."

-o-o-o-

ONE CONSOLATION

Father (looking over his son's report card): "One thing is in your favor. With grades like these, you couldn't possibly be cheating.

## PIKES PEAK RADIO AMATEUR ASSN. COMPLETES 18 YEAR MOVING 'CIRCLE'

The PPRAA seems to be "going around in circles"---the best kind, of course. According to the minutes of what was then the El Paso Radio Club on January 10, 1951, meetings were moved to the Naval Reserve Training Center.

The first two meetings were held at the YMCA---attended by eight amateurs ---WØCCG, Dick Vertefeuille; WØHDU, Don Murray; WØEHB, Ralph Herrlin; WØ-LZY, Elmer Hamilton; WØJMB, Jim Reynolds; WØKMS, Frank Thornton; WØANX, Jim Merrill, and WØHEM, Jim Simpson.

The first meeting took place at the YMCA, as did the second.

However, the "Y" asked the club to carry a $25 sustaining membership, so a decision was made to move.

Meetings were moved from the Naval Reserve Center to the American Red Cross Center January 14, 1959, at which time a motion was made to change the name of the club to its present designation of the Pikes Peak Radio Amateur Assn.

Now we're back at the Naval Reserve Center again. Talk about "history repeating itself!!"

ZERO BEAT Editor
Pikes Peak Radio Amateur Association Inc.
1142 Rainier Drive
Colorado Springs Colo. 80910

COLORADO SPRINGS DEC 7 1968 PM COLO.

Linda Lewis
2018 West Uintah
Colorado Springs
Colorado 80904